APPLICATION NOTE

AP-247

November 1986

Adding Capability to the NDS-II System with Cluster Boards

CHRIS FEETHAM
DSO APPLICATIONS ENGINEERING

Order Number: 231483-001

INTRODUCTION

The ISIS cluster board (iMDX 581) was introduced into the NDS-II product line to reduce dramatically the cost of a personal workstation. It achieved this goal and gave the network numerous expansion opportunities. All of the applications discussed in this note are available through the NDS-II toolbox.

ADDING ADDITIONAL USERS

The cluster board is a single MultibusR board with an 8085-2 processor, 64 K of RAM, an RS232 serial port, and other supporting circuitry. Figure 1 shows a block diagram, and a complete circuit diagram is included in Appendix A. A cluster board may be installed into any master slot of a network Model 800 or Series II, III, or IV development system to support an additional network user via a dumb terminal. This low-cost method of adding extra users to the network served as the primary motivator for the development of the cluster board.

With the exception of Multibus slot, some power, and access to the host's Ethernet controller board, the cluster board uses none of its host development system's resources. The cluster board does not slow the host, which generally has no knowledge of its presence in the system. A host may support multiple cluster boards. Figure 2 shows the maximum number that may be added to each host system.

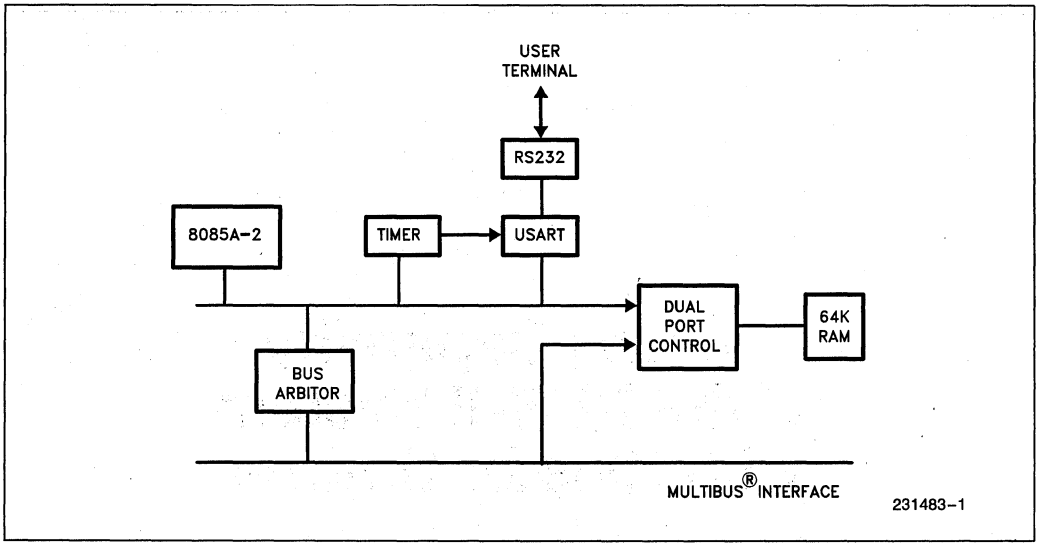

Figure 1. Cluster Board Block Diagram

During initialization of the host system, an operating system is loaded from the network resource manager (NRM) into the RAM of the cluster board. While ISIS operating system was chosen to ensure compatability with previous development environments, CP/M-80 may also be used (see AP 253). During operation, ISIS accesses data files and programs from the protected hierarchical file system of the NRM using the Ethernet controller boards. Access to local host devices, such as floppy disks or Winchester disks, is not permitted.

In normal use, a dumb CRT would be connected to the RS232 port of the cluster board. The user would then have access to all of the 8-bit network tools, including full-screen editors, program management tools, and electronic mail. While some 8-bit compilers are also available, the cluster board is generally used for interactive work supportng the engineer (or the support staff). Access to 16-bit advanced tools is available via the Export facility of the networks' distributed job-control system, where the cluster user may generate a job using

local tools and then request its execution on a more capable system upon the same network. This productive shared-tool environment is described further in AP 244.

It is not mandatory to install a dumb CRT. In fact, any RS232 device will suffice. The possibilities are endless, since RS232 is one of the few standards in the electronics industry today. Although this article will discuss various applications, the solution is general in nature, and anysystem with an RS232 interface could be connected to the cluster board.

REMOTE NETWORK OPERATION

Figure 3 shows the connection of an Intel iPDSTM portable development system. The iPDS system is especially suited to 8-bit microprocessor applications development. It has many tools for individual development but does not include advanced network tools, such as electronic mail or program management. In this application, the iPDS system is at a remote site, and a modem link connects the iPDS system to the NDS-II network.

A dumb terminal emulator program called REMOTE has been written for the iPDS system. This program, as part of the network toolbox, includes autodialing a Hayes smart modem. While running in terminal emulation mode, the iPDS can access all facilities of the network, including electronic mail and distributed job control facilities. REMOTE also includes a file-transfer protocol that enables data transfer between the iPDS system and the NRM.

If the iPDS system is at a service location, you need a diagnostic program from the NRM. Or, the iPDS could have data gathered from a remote site to be analysed back at base. The possibilities are endless.

System	Maximum Clusters
Model 800	2
Series II	3
Series III	1
Series IV	3
Expansion Chassis	4

Figure 2. Adding Cluster Boards to Host Systems

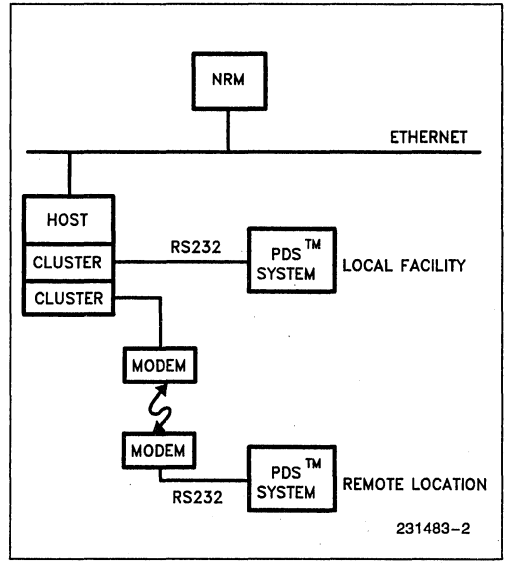

Figure 3. Attaching the iPDS™ System to the Network via an ISIS Cluster Board

ADDING AN ADDITIONAL PRINTER

An additional printer is often required on an NDS-II system. Letter quality printers are popular and their RS232 connection makes them a natural for connection to the cluster board. One problem - how does an output device such as a printer LOGON to the network and initiate file transfer from file to paper.

Server is a slight modification of the standard cluster PROM - it includes a PROM based console to solve the initialization problem. After power-up the LOGON program calls the console input routine to input the user name and password - within server a user name and password is supplied from PROM (Refer to the AP-242 — Additional printer support for the NDS II — for more complete information.)

Once logged on the system executes an initialization file ISIS.INI from the users home directory. In this server example a program that never exits will be chosen - PRINCE, a versatile serial printer driver, is such a program. Following initial drive assignments PRINCE polls a directory looking for files, once a file is identified it is copied to the serial printer and then deleted - simple but most effective.

AUTOBOOT CLUSTER BOARD

BOOTUP is an extensively modified cluster PROM. Rather than rely upon a host system to provide its operating system BOOTUP allows a cluster board to load its own ISIS operating system from the network. Following power-up BOOTUP initializes an SBC550 Ethernet controller and then logs on to the NRM under a predefined name of ISIS. Once logged on BOOTUP loads its operating system from the network. Before passing control to the user BOOTUP seeks out and initializes any other cluster boards also installed within the same chassis.

BOOTUP provides the network user with a low cost method of adding software developers - take any iSBC chassis, add an Ethernet Comm set and a cluster board containing the BOOTUP PROM and the system is complete. Up to seven additional cluster boards may be added to provide a very low cost eight-user environment as shown in Figure 4. BOOTUP also supports the server concept. The BOOTUP PROM is provided with the Network/Series IV Toolbox product.

CONCLUSION

I hope I have explained some of the versatility of the ISIS cluster board. Think of it as a universal interface board between the complex multi-protocol world of Ethernet and the straight forward start-data-stop world of RS232. I am sure this will prompt many new applications for the product - feel free to experiment and benefit from your findings.

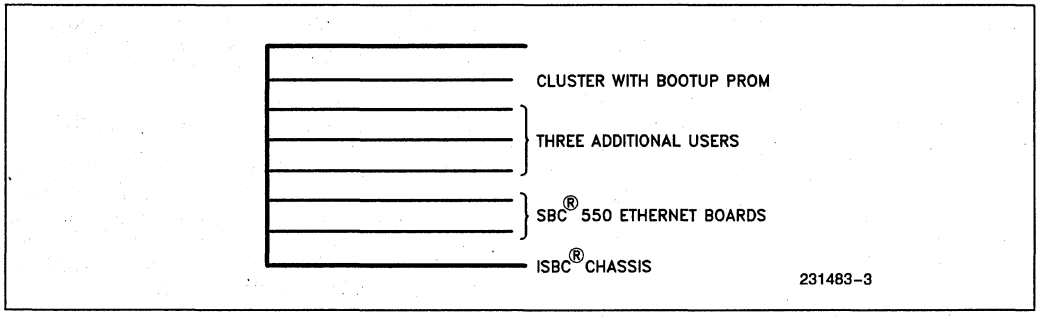

Figure 4. BOOTUP Allows a Low Cost iSBC® Chassis to Act as a Host for Software Developers

REVISIONS							
REV	DESCRIPTION	ECN	DATE	CHK	DATE	APVD	DATE
A	ECO 11-14884						
A	ECO 12-14406						

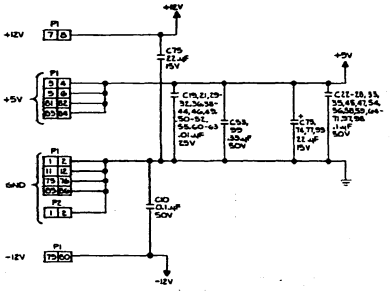

NOTES: UNLESS OTHERWISE SPECIFIED.
1. CAPACITANCE VALUES ARE IN MICROFARADS.
2. RESISTANCE VALUES ARE IN OHMS, 1/4W, 5%.

DEVICE TABLE

REF DES	DEVICE TYPE	POWER PINS GND	+5V	-5V	+12V	UNUSED LOGIC ELEMENT OUTPUT PINS
A46,58,61,64,65	74S00	7	14			A45-3
A99	74LS02	7	14			A88-6
A32	74S03	7	14			A26-3,6
A33,40,51,63	74S04	7	14			A40-2,6,10,12,A63-10
A30,31	74LS04	7	14			A30-4,8
A41	74S08	7	14			
A39,45	74LS08	7	14			
A49	74S40	7	14			
A47	74S11	7	14			
A48	74S11	7	14			A48-6,12
A28	74S20	7	14			
A66	74LS27	7	14			A48-8
A42,62	74S32	7	14			
A27,52	74LS32	7	14			
A29	74S7	7	14			A29-6,8
A44,55	74S74	7	14			A44-8,9
A31	74LS74	7	14			A31-8,9
A17,50	74LS138	8	16			
A34	74S140	7	14			
A35	74LS157	8	16			
A12	74166	8	16			
A34,43	74S175	8	16			A34-2,10,15;A43-2,3
A53,54	74LS240	10	20			
A36	74S373	10	20			
A25	74LS373	10	20			
A14	78188	7		14	1	
A15,16	75189A	7	14			A15-5,11; A16-6
A17-84	Z464	8	16			
A68,69	8T26	8	16			
A67	8216					
A56	8284A-2	20	40			
A60	74367	8	16			
A64	8303-1	20	40			
A57	8216 (8212)	8	16			
A13	8212	8	16			
A74,75	8216	8	16			
A22	8251A	4	26			
A21	8254	12	24			
A20	8259A	14	28			
A24,32,72,73	DP8304	10	20			
A38	1602	8	16			

REFERENCE DESIGNATION	
LAST USED	NOT USED
A84	A1-11,19,20
C100	C30,34,79,-86,88-92, 94,95
CR1	
E102	E3-48,48A,7,14,18, 108,-0108,117,118, 124,-125,-1241,-1,-180
	185
J8	J1,2
P2	
Q1	
R85	R5,9,83
R90	R91
TP1	VR1
Y2	

ITEM NO	DESCRIPTION
QUANTITY PER BASH NO	PARTS LIST

UNLESS OTHERWISE SPECIFIED
1 DIMENSIONS ARE IN INCHES
2 BREAK ALL SHARP EDGES
3 DO NOT SCALE DRAWING
4 TOLERANCES
.XXX ± .2
.XX ± —
.XXX ± —

	SIGNATURE	DATE
DRN BY		9/1/77
CHK BY		
ENGR		
APVD		
MFG		

intel
3065 BOWERS AVE
SANTA CLARA
CALIF 95051

TITLE
SCHEMATIC,
ISIS CLUSTER

SIZE	FSCM NO	DWG NO	REV
B	12000	P 114220	A

SCALE NONE SHEET 1 OF 5

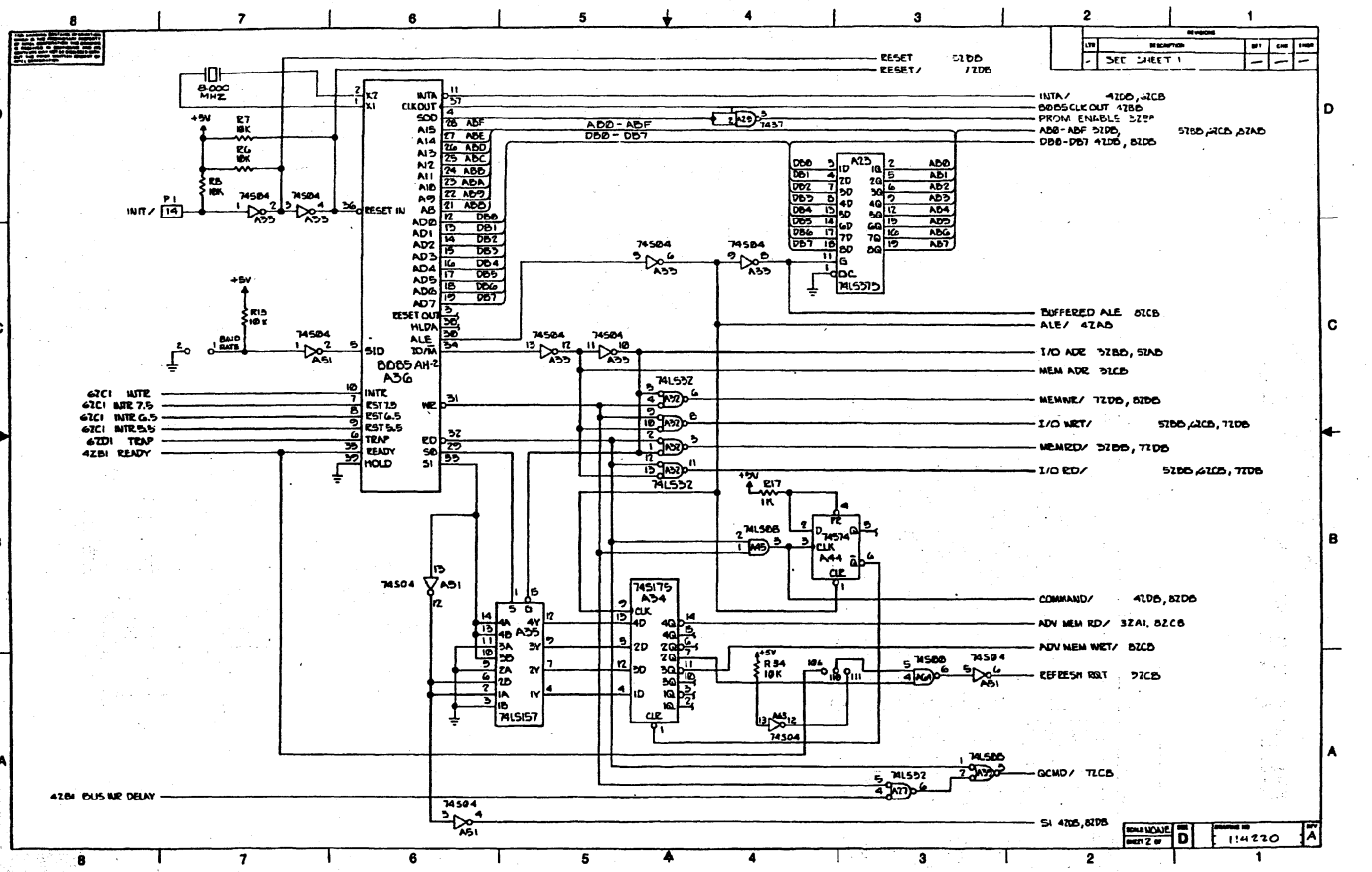

SEE SHEET 1
RESET 52DB
RESET/ 72DB
INTA/ 42DB, 62CB
BOBSCLK OUT 42BB
PROM ENABLE 32BB
AB0-AB7 52DB, 52BB, 62CB, 82AB
DB0-DB7 42DB, 82DB
BUFFERED ALE 82CB
ALE/ 42AB
I/O ADR 32BB, 52AB
MEM ADR 32CB
MEMWR/ 72DB, 82DB
I/O WRT/ 52BB, 62CB, 72DB
MEMRD/ 32BB, 72DB
I/O RD/ 52BB, 62CB, 72DB
COMMAND/ 42DB, 82DB
ADV MEM RD/ 32A1, 82CB
ADV MEM WRT/ 82CB
REFRESH RQT 32CB
QCMD/ 72CB
S1 42DB, 82DB
42B1 BUS WR DELAY
62C1 INTR
62C1 INTR 7.5
62C1 INTR 6.5
62C1 INTR 5.5
62D1 TRAP
42B1 READY
INIT/
8.000 MHZ
BOBS AH-2
A36
74S04
74S00
74S32
74S175
A34
74S157
A35
74S74
A44
74LS373
A23
74LS32
74LS08
74S04
A51
A33
A35
A27
A44
A45
A29
A37
SCALE NONE
SHEET 2 OF
D
114220
A

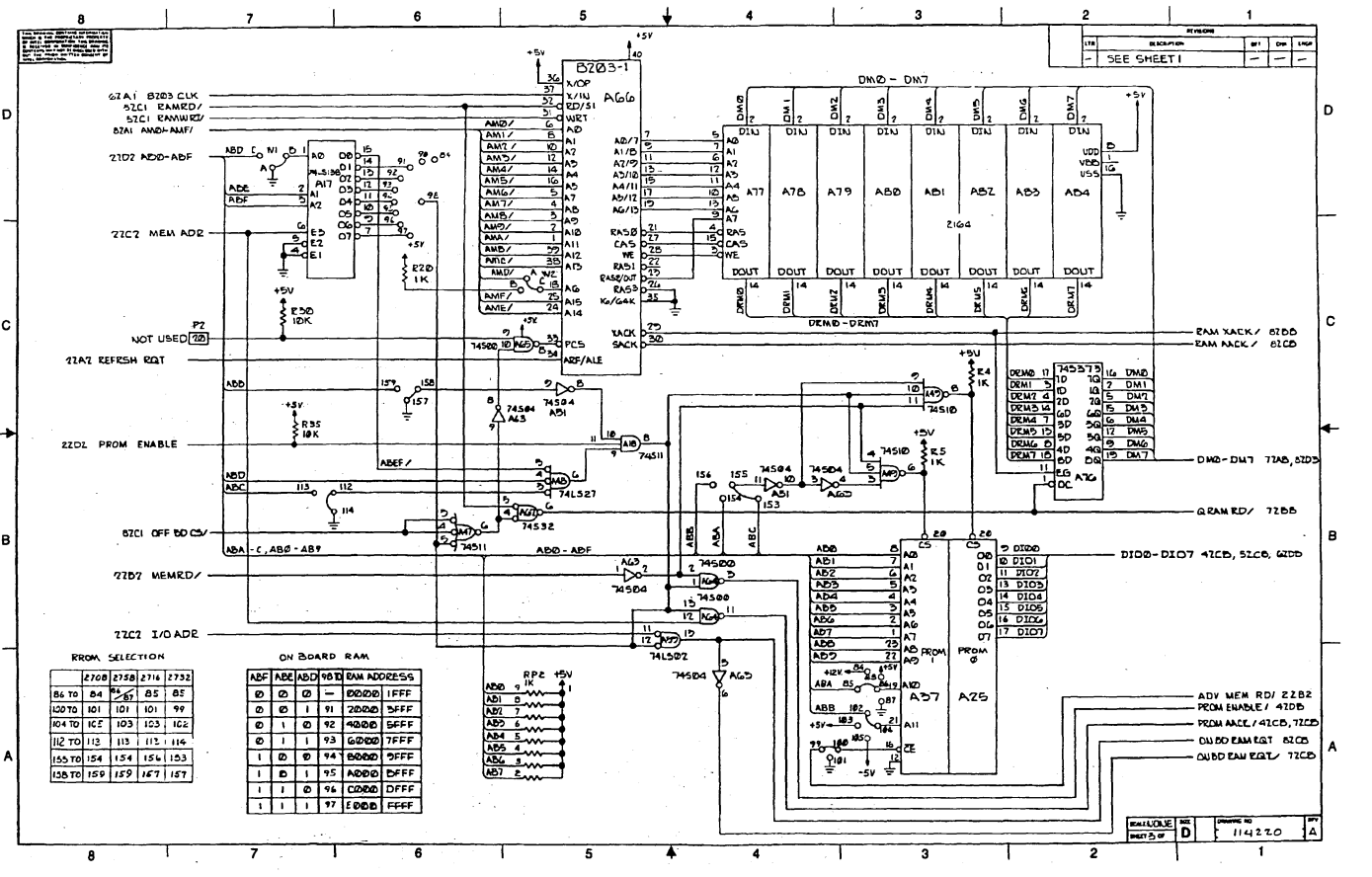

	2708	2758	2716	2732
86 TO 84	84	84, 85	85	85
100 TO 101	101	101	101	99
104 TO 105	105	103	103	102
112 TO 113	113	113	113	114
155 TO 154	154	154	156	153
158 TO 159	159	159	157	157

ABF	ABE	ABD	98	RAM ADDRESS
0	0	0	—	0000 1FFF
0	0	1	91	2000 3FFF
0	1	0	92	4000 5FFF
0	1	1	93	6000 7FFF
1	0	0	94	8000 9FFF
1	0	1	95	A000 BFFF
1	1	0	96	C000 DFFF
1	1	1	97	E000 FFFF

REVISIONS			
LTR	DESCRIPTION	BY	CHK
-	SEE SHEET 1	—	—

SCALE/NONE	SIZE D	DRAWING NO 114220	REV A
SHEET 3 OF			

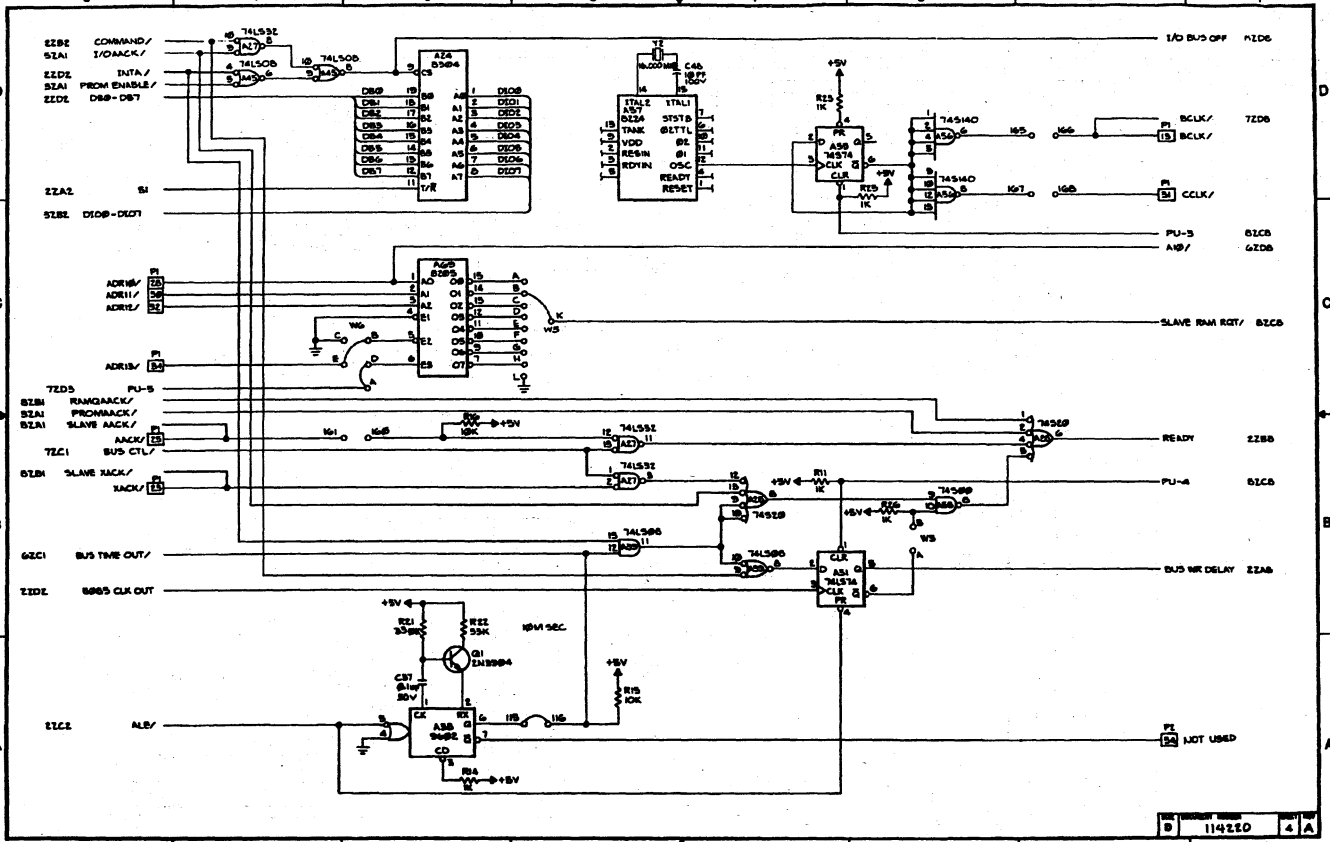

COMMAND/
I/OACK/
INTA/
PROM ENABLE/
DB0-DB7
S1
DI00-DI07
ADR10/
ADR11/
ADR12/
ADR13/
PU-5
RAMQAACK/
PROMAACK/
SLAVE AACK/
AACK/
BUS CTL/
SLAVE XACK/
XACK/
BUS TIME OUT/
8085 CLK OUT
ALE/
I/O BUS OFF
BCLK/
CCLK/
PU-3
A10/
SLAVE RAM RQT/
READY
PU-4
BUS WR DELAY
NOT USED
10M SEC
114220

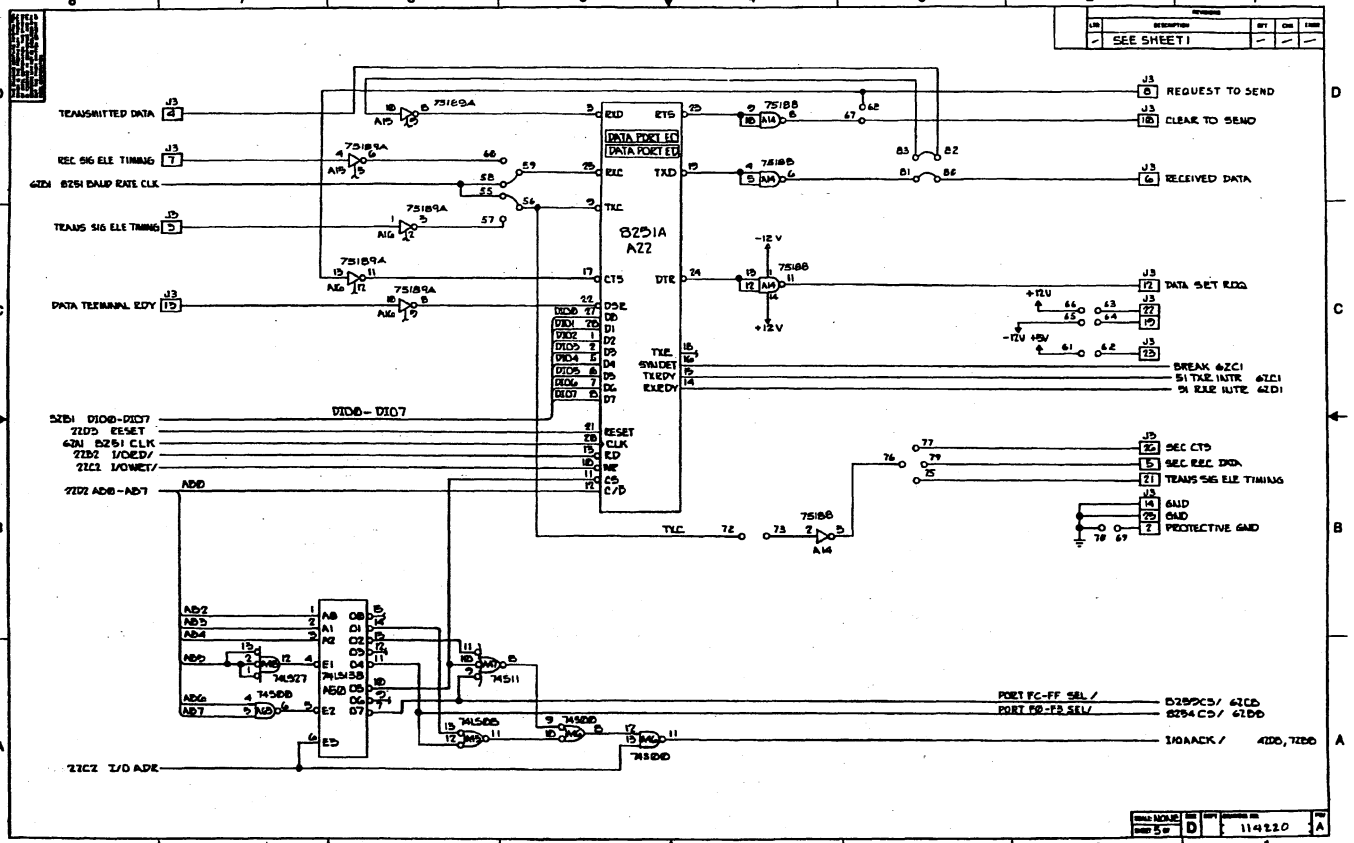
SEE SHEET 1
TRANSMITTED DATA
REC SIG ELE TIMING
6ZD1 8251 BAUD RATE CLK
TRANS SIG ELE TIMING
DATA TERMINAL RDY
8251A
A22
DATA PORT EC
DATA PORT ED
REQUEST TO SEND
CLEAR TO SEND
RECEIVED DATA
DATA SET RDQ
BREAK 6ZC1
51 TXR INTR 6ZC1
51 RXR INTR 6ZD1
DIO0 - DIO7
SEC CTS
SEC REC DATA
TRANS SIG ELE TIMING
GND
PROTECTIVE GND
PORT FC-FF SEL /
PORT F0-F3 SEL /
I/O ACK /
22C2 I/O ADR
114220
A

231483-8

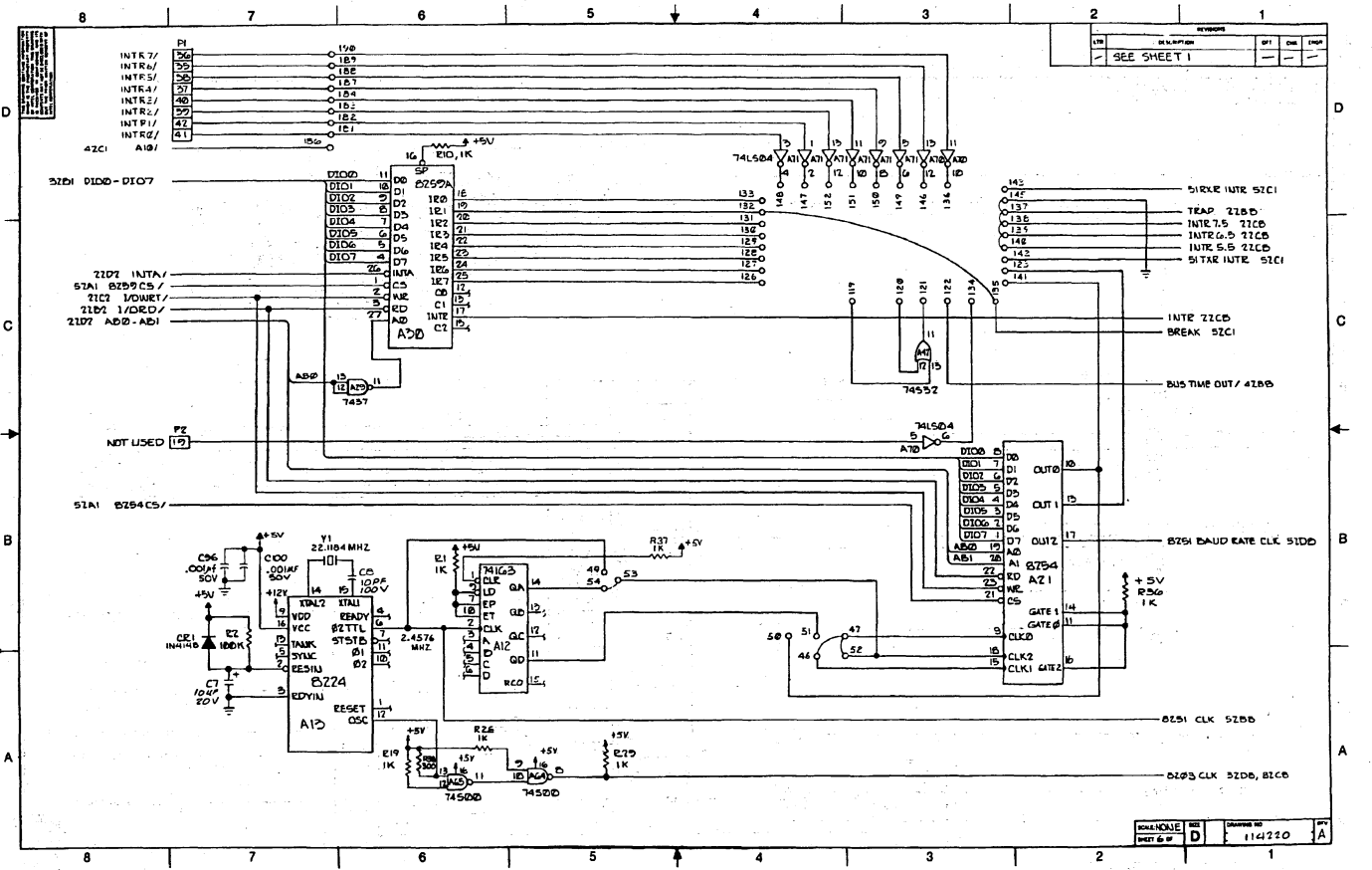

REVISIONS
LTR
DESCRIPTION
OFF
CHK
ENGR
SEE SHEET 1
P1
INTR7/
INTR6/
INTR5/
INTR4/
INTR3/
INTR2/
INTR1/
INTR0/
42C1 A10/
32B1 DIO0-DIO7
22D2 INTA/
52A1 8259CS/
22C2 I/OWRT/
22B2 I/ORD/
22D2 AB0-AB1
NOT USED
52A1 8254CS/
8259A
A30
R10, 1K
+5V
74LS04
A71
A70
74S32
A47
7437
A29
74LS04
A70
8254
A21
OUT0
OUT1
OUT2
GATE1
GATE0
CLK0
CLK2
CLK1
GATE2
+5V
R36
1K
8251 BAUD RATE CLK 51DB
51RXR INTR 52C1
TRAP 22BB
INTR 7.5 22CB
INTR 6.5 22CB
INTR 5.5 22CB
51TXR INTR 52C1
INTR 22CB
BREAK 52C1
BUS TIME OUT/ 42BB
8251 CLK 52BB
8203 CLK 32DB, 82CB
C96 .001µf 50V
C100 .001µf 50V
Y1 22.1184 MHZ
C8 10PF 100V
+12V
XTAL2
XTAL1
VDD
VCC
TANK
SYNC
RESIN
RDYIN
READY
82TTL
STSTB
Ø1
Ø2
RESET
OSC
8224
A13
CR1 1N4148
R2 100K
C7 10µF 20V
2.4576 MHZ
R1 1K
74163
A12
R37 1K
R26 1K
R19 1K
R29 1K
74S00
A65
A64
SCALE NONE
SHEET 6 OF
SIZE D
DRAWING NO 114220
REV A

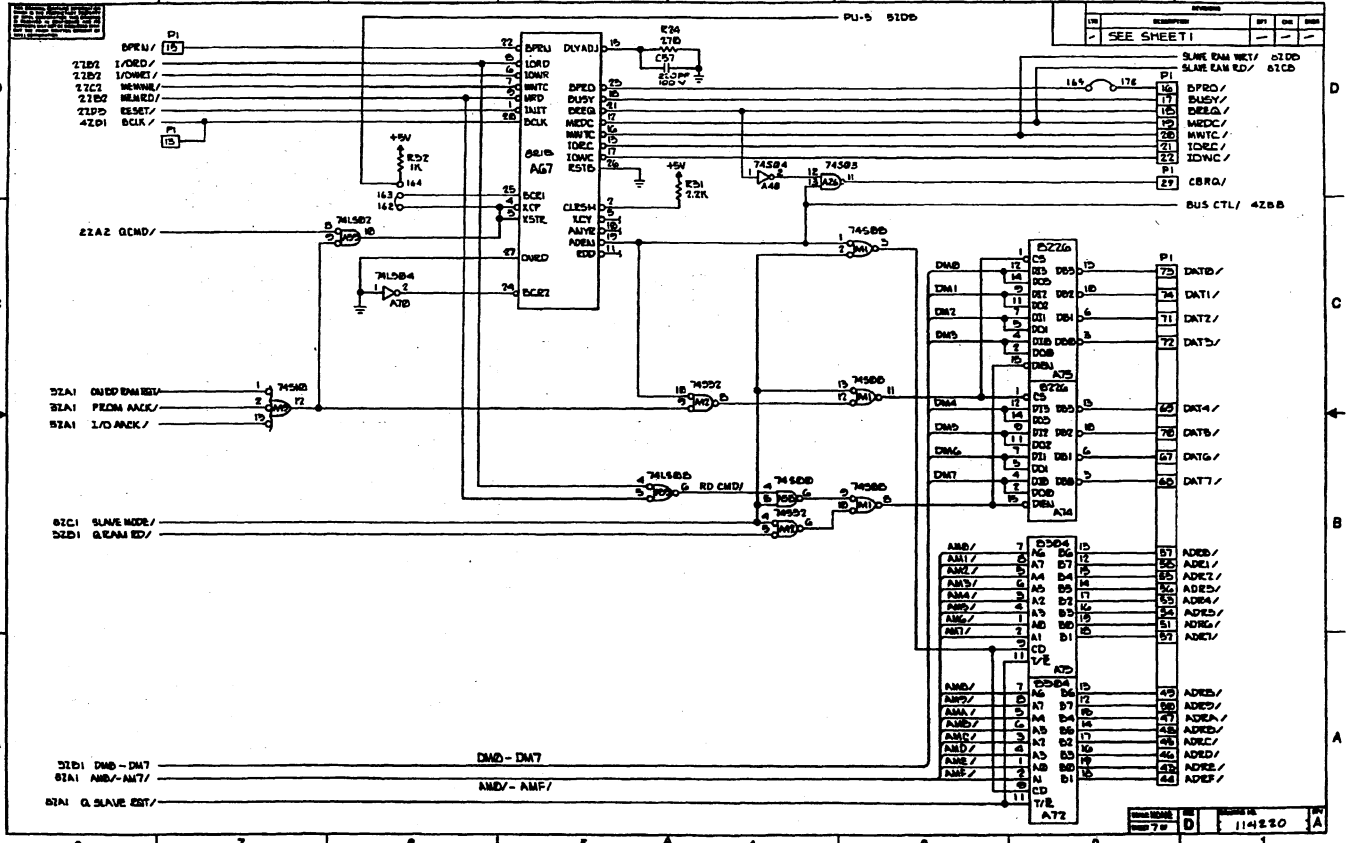

SEE SHEET 1
PU-5 5ZDB
SLAVE RAM WRT/ 8ZDB
SLAVE RAM RD/ 8ZCB
BPRN/
I/ORD/
I/OWRT/
MEMWR/
MEMRD/
RESET/
BCLK/
BPRQ/
BUSY/
BREQ/
MRDC/
MWTC/
IORC/
IOWC/
CBRQ/
BUS CTL/ 4ZBB
8R18
A67
BPRN
LORD
IOWR
MWTC
MRD
INIT
BCLK
DLYADJ
BPRQ
BUSY
BREQ
MRDC
MWTC
IORC
IOWC
RSTB
BCR1
XCF
XSTR
OWRD
BCR2
CLRSH
XCY
ANYR
ADEN
RDD
R24
270
C57
20 OFF
100 V
R52
1K
R31
2.2K
+5V
74S04
A48
74S03
A26
74LS02
74LS04
A70
74S08
74S02
74LS08
RD CMD/
74S00
74S02
74S00
74S08
74S08
74S02
74S08
74S08
8226
A75
8226
A74
8304
A73
8304
A72
DM0
DM1
DM2
DM3
DM4
DM5
DM6
DM7
DATB/
DAT1/
DAT2/
DAT3/
DAT4/
DAT5/
DAT6/
DAT7/
AMB/
AM1/
AM2/
AM3/
AM4/
AM5/
AM6/
AM7/
ADRB/
ADR1/
ADR2/
ADR3/
ADR4/
ADR5/
ADR6/
ADR7/
ADRB/
ADR9/
ADRA/
ADRB/
ADRC/
ADRD/
ADRE/
ADRF/
DM0 - DM7
AMB/ - AMF/
3ZA1 ON BD RAM RQT/
3ZA1 PROM AACK/
3ZA1 I/O AACK/
3ZB1 DM0 - DM7
8ZA1 AMB/-AM7/
8ZA1 Q SLAVE RQT/
8ZC1 SLAVE MODE/
3ZB1 Q RAM RD/
114220
D
A

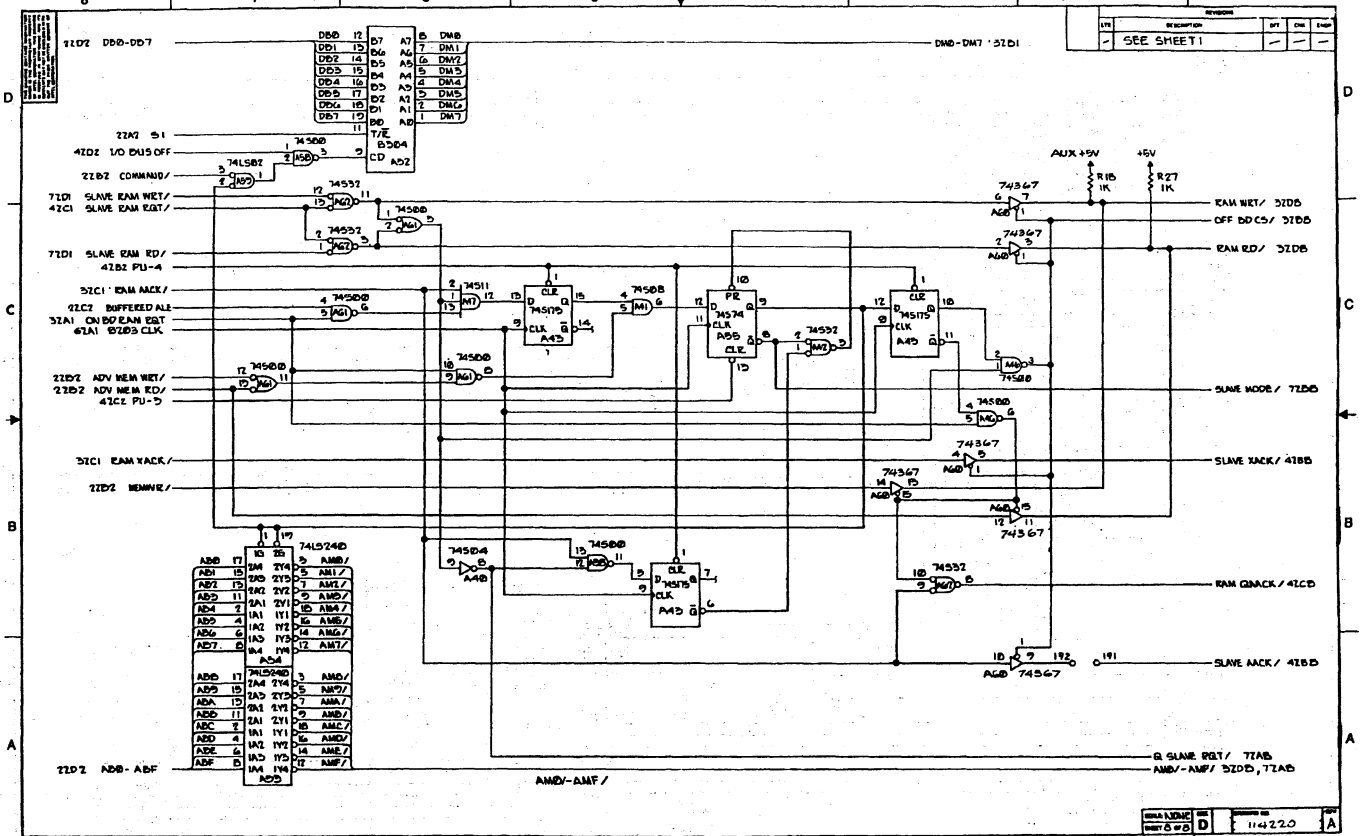
SEE SHEET1
DMD-DM7 '3ZD1
AUX +5V
+5V
R18 1K
R27 1K
RAM WRT/ 3ZD8
OFF BD CS/ 3ZD8
RAM RD/ 3ZD8
SLAVE MODE/ 7ZD8
SLAVE XACK/ 41B8
RAM QNACK/ 41C8
SLAVE AACK/ 41B8
Q SLAVE REQ/ 7ZA8
AMD/-AMF/ 3ZD8, 7ZA8
AMD/-AMF/
DB0-DB7
I/O BUS OFF
COMMAND/
SLAVE RAM WRT/
SLAVE RAM REQ/
SLAVE RAM RD/
PU-4
RAM XACK/
BUFFERED ALE
ON BD RAM REQ
BD CLK
ADV MEM WRT/
ADV MEM RD/
PU-5
MEMWR/
A8- A8F
74LS00
74LS02
74S32
74S08
74S11
74S175
74S74
74S04
74LS240
74S367
74S00
A43
A45
A85
A04
A05
A48
A49
A86
A87
A88
A89
A90
A91
A92
A93
A94
A95
A96
A97
A98
A99
A100
A101
A102
A103
A104
A105
A106
A107
A108
A109
A110
A111
A112
A113
A114
A115
A116
A117
A118
A119
A120
A121
A122
A123
A124
A125